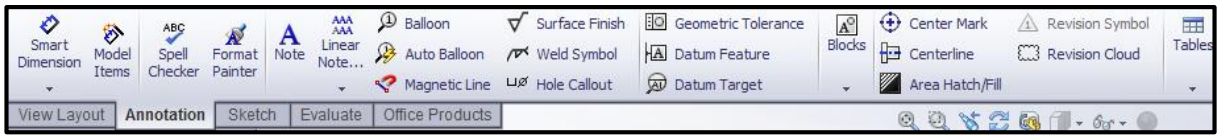

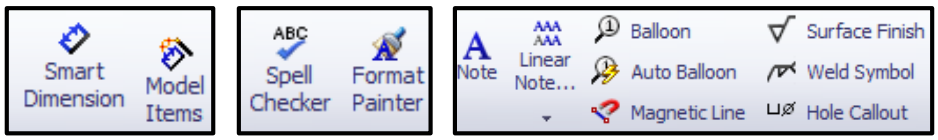

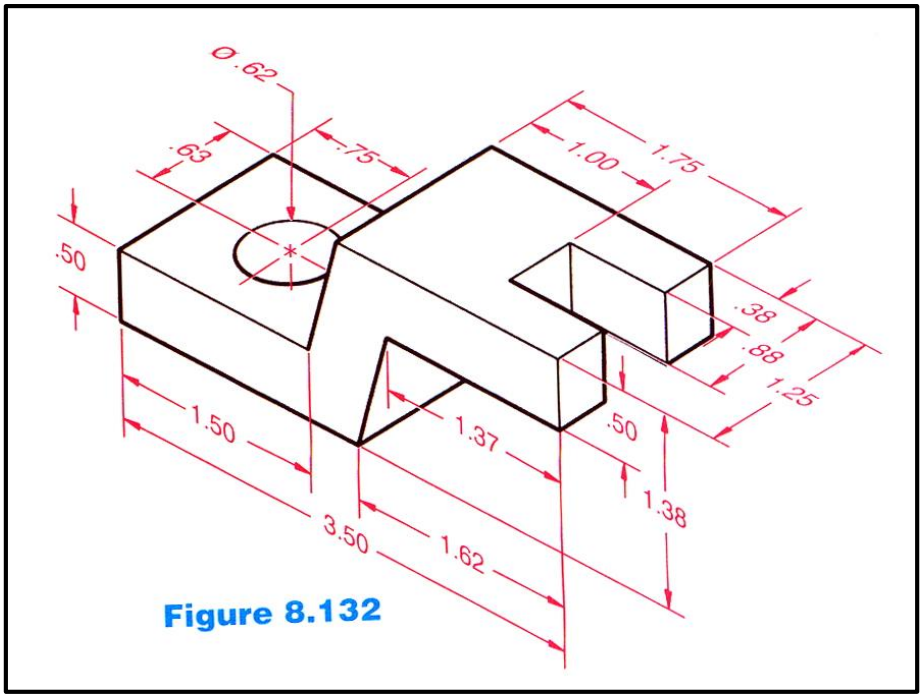

Figure 8.132

Teacher: Ehsan Fathi, PHD Student in Mechanical Engineering at University of Birjand
Email: Ehsanfathi_eh@yahoo.com
Telegram: @FathiTrainingGroup
Website: FathiTrainingGroup.ir
Tel: 09386249330

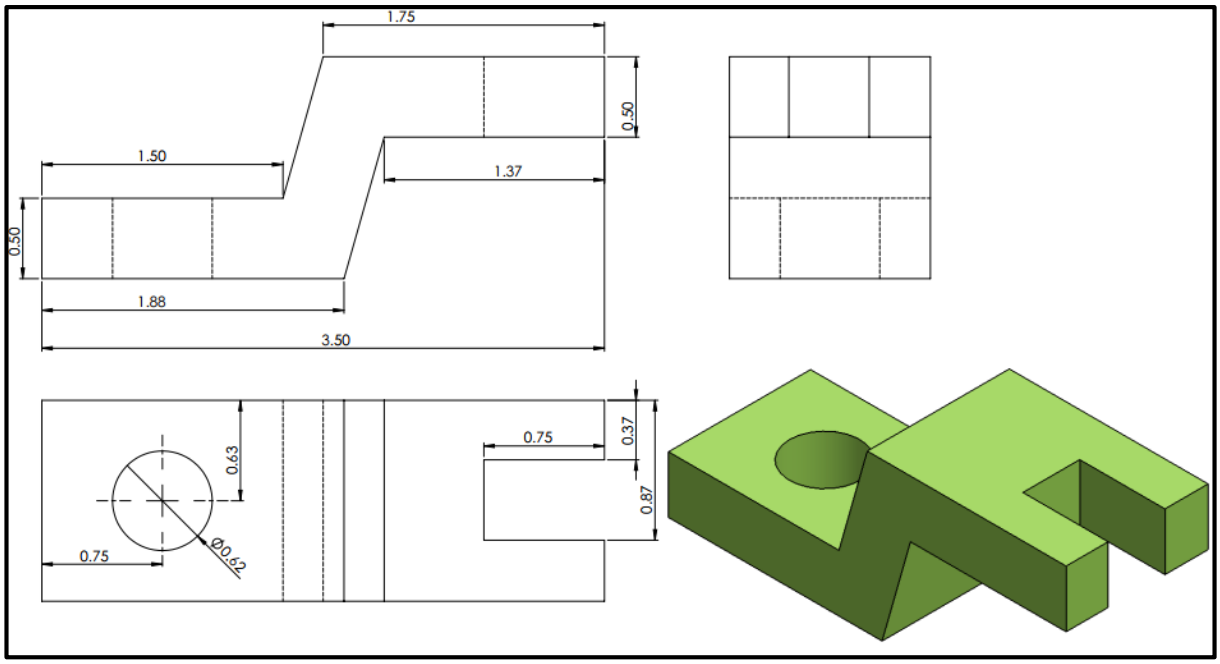

Teacher: Ehsan Fathi, PHD Student in Mechanical Engineering at University of Birjand
Email: Ehsanfathi_eh@yahoo.com
Telegram: @FathiTrainingGroup
Website: FathiTrainingGroup.ir
Tel: 09386249330